WT-L4D售服零件表

MERC 4 09.07.2024 REV 16.07.2026

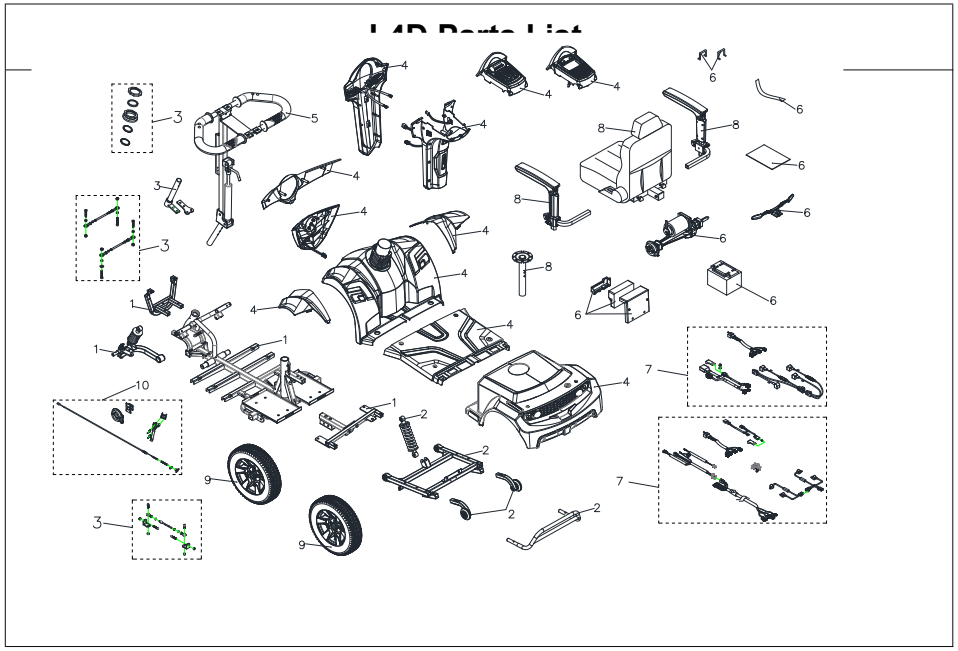

L4D Parts List

Fig&Index NO.	Parts No.	Parts Name Description	QTY.		Remark
		LH ABSORBER ARM ASSY (W/I ABSORBERS/ABSORBER ARM)	1SET		
		RH ABSORBER ARM ASSY (W/I ABSORBERS/ABSORBER ARM)	1SET		
		BEARING ASS'Y	1SET		
		GUIDING CONNECTION ROD ASS'Y	1SET		
		PANEL COER ASS'Y, LCD	1SET		
		CHARGER SOCKET ASS'Y	1SET		
		REAR SHROUD ASS'Y, PANTONE 200C+GLITTER	1SET		
		REAR SHROUD ASS'Y, PANTONE WARM GRAY 3C+GLITTER	1SET		
		DECORATION ASS'Y, ORANGE 15	1SET		
		DECORATION ASS'Y, PANTONE 200C+GLITTER	1SET		
		DECORATION ASS'Y, PANTONE 200C+GLITTER	1SET		
		DECORATION ASS'Y, GREEN 43	1SET		
		DECORATION ASS'Y, BLUE 54	1SET		
		HYDRAULIC PUMP HANDLE ASS'Y	1SET		
		R ASS'Y	1SET		
		18"x18"x22" SEAT ASS'Y, TA386C3	1SET		
		SEAT POST ASS'Y	1SET		
		ARMREST, ADJUSTABLE, L	1SET		
		ARMREST, ADJUSTABLE, R	1SET		
		FRONT WHEEL ASS'Y, BLACK, W/O LOGO WHEEL COER	1SET		
		REAR WHEEL ASS'Y, BLACK, R, W/I LOGO WHEEL COER	1SET		
		BRAKE ASS'Y ,L	1SET		
		BRAKE ASS'Y	1SET		

L4D Parts List

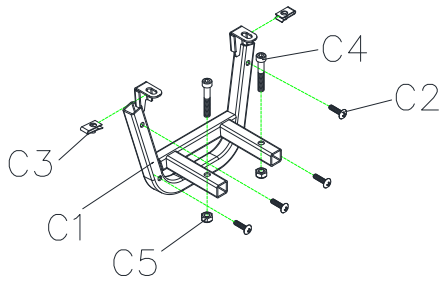

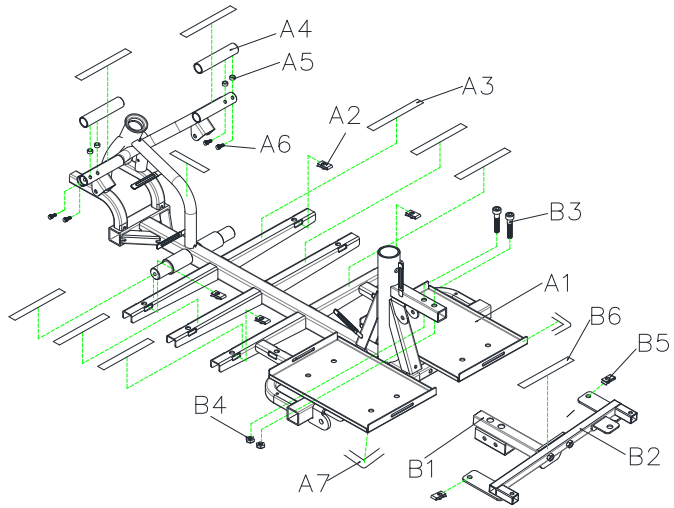

L4D Parts List

Fig&Index NO.	Parts No.	Parts Name / Description	QTY.		Remark
1		**FRONT FRAME ASS'Y**			
A1	1921229	FRAME, FRONT	1		
A2	1911840	U-TYPE SPRING NUT ,M6 ,BLACK	4		
A3	1913048	ELCRO STRIP ,LOOP ,160mm	9		
A4		BRACKET, FRONT SHORUD	2		
A5	1908426	SPACER, Ø8.1xØ11x3T	4		
A6	1921230	HEX SOCKET SCREW, M6x35L	4		
A7		FOAM GLUE ,BLACK	2		
B1	1921231	REAR SHROUD HOLDER ,FRONT	1		
B2	1921232	REAR SHROUD HOLDER ,BACK-END	1		
B3		HEX SOCKET BOLT, M8xP1.25x40L	2		
B4		LOCKING NUT, M8xP1.25	2		
B5		U-TYPE SPRING NUT ,M6 ,BLACK	2		
B6		ELCRO STRIP ,LOOP ,160mm	1		
C1	1913900	FRONT BUMPER	1		
C2	1916119	CROSS SREW , M6x30L	4		
C3	1911840	U-TYPE SPRING NUT ,M6 ,BLACK	2		
C4	1946247	HEXAGON BOLT, M8x55L	2		
C5	1905469	LOCKING NUT , M8	2		

L4D Parts List

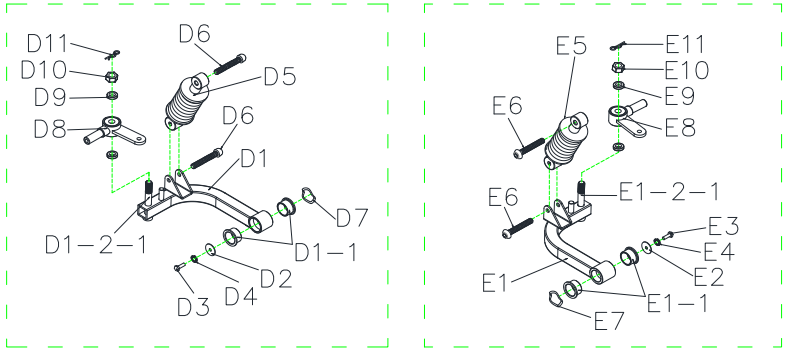

L4D Parts List

Fig&Index NO.	Parts No.	Parts Name / Description	QTY.		Remark
D1-D11	**1912730**	**LH ABSORBER ARM ASSY (W/I ABSORBERS/ABSORBER ARM)**	**1**		
D1	1914026	LH ABSORBER ARM (W/I BUSH)	1		
D1-1	1915139	BUSH ,OD=35 ,ID=8 ,L=17mm	2		
D1-2	1904352	LH ABSORBER ARM	1		
D1-2-1		BOLT ,M12x80L	1		
D2	1915874	FLAT WASHER ,OD=35 ,ID=8 ,T=3mm	1		
D3	1916884	HEX SCREW , M8×P1.25×20L	1		
D4	1907794	SPRING WASHER, OD=14 ,ID=8 ,T=2mm	1		
D5	1912744	ABSORBERS, YELLOW, 150LBS	1		
D6	1908423	HEX SOCKET SCREW , M8x50L	2		
D7	1915186	WAE TYPE WASHER ,OD=33.7 ,ID=25.6 ,T=0.3mm	1		
D8	1904351	LH ABSORBER ARM WQI BEARING	1		
D9		SPACER 20x12x5T	2		
D10	1914009	LOCKING NUT , M12xP1.75	1		
D11	1909498	R-PIN 1.8mm	1		
E1-E11	**1912729**	**RH ABSORBER ARM ASSY (W/I ABSORBERS/ABSORBER ARM)**	**1**		
E1	1914025	RH ABSORBER ARM (W/I BUSH)	1		
E1-1	1915139	BUSH ,OD=35 ,ID=8 ,L=17mm	2		
E1-2	1904352	RH ABSORBER ARM	1		
E1-2-1		BOLT ,M12x80L	1		
E2	1915874	FLAT WASHER ,OD=35 ,ID=8 ,T=3mm	1		
E3		HEX SCREW , M8xP1.25x20L	1		
E4		SPRING WASHER, OD=14 ,ID=8 ,T=2mm	1		
E5	1912744	ABSORBERS, YELLOW, 150LBS	1		
E6	1908423	HEX SOCKET SCREW , M8x50L	2		
E7	1915186	WAE TYPE WASHER ,OD=33.7 ,ID=25.6 ,T=0.3mm	1		
E8	1904351	LH ABSORBER ARM WI BEARING	1		
E9		SPACER 20x12x5T	2		
E10	1914009	LOCKING NUT , M12xP1.75	1		
E11	1909498	R-PIN 1.8mm	1		

L4D Parts List

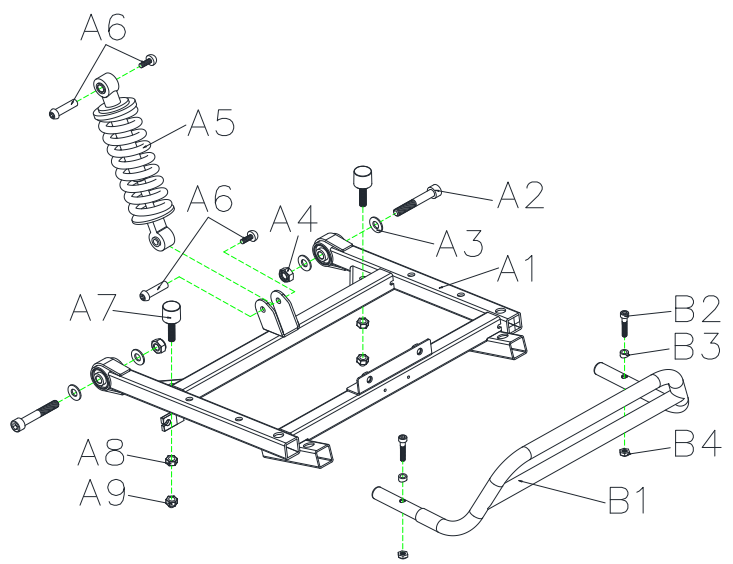

L4D Parts List

Fig&Index NO.	Parts No.	Parts Name Description	QTY.		Remark
A1	1919736	REAR FRAME	1		
A2	1921236	HEX SOCKET SCREW , M10xP1.5x55L	2		
A3		FLAT WASHER ,OD=21 ,ID=10.5 ,T=2mm	4		
A4		LOCK NUT, M10xP1.5	2		
A5	1912710	REAR ABSORBER, 950LBS	1		
A6	1917813	LOCKING SCREW SET, M8xP1.25x30L	2		
A7		CHASSIS RUBBER STOPPER	2		
A8	1912934	LOCKING NUT , M8xP1.25	2		
A9	1908424	LOCKING NUT,M8	2		
B1	1913047	REAR BUMPER	1		
B2		HEX SOCKET SCREW , M6x35L	2		
B3		CURED WASHER, OD=17, ID=6.2, T=6T	2		
B4		LOCK NUT, M6	2		

L4D Parts List

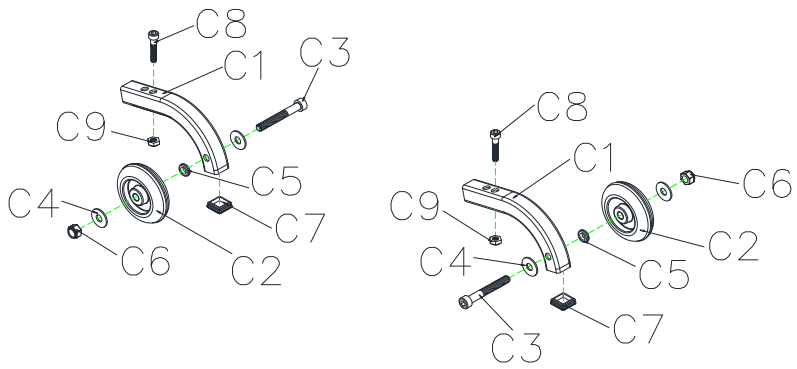

L4D Parts List

Fig&Index NO.	Parts No.	Parts Name / Description	QTY.		Remark
C1-C7			**1SET**		
C1	1917740	ANTI-ROLL WHEEL BRACKET	2		
C2	1915988	ANT-TIP WHEELS	2		
C3	1921235	HEX SOCKET SCREW , M8xP1.25x60L ,THREAD LENGTH=30mm	2		
C4	1917741	FLAT WASHER ,OD=18 ,ID=8.2 ,T=1.6mm	4		
C5	1917742	PLASTIC WASHER , Ø14xØ8x3.5L	2		
C6	1908424	LOCKING NUT, M8	2		
C7	1917743	PLASTIC SQUARE CAP ,3/4" ,20x20	2		
C8	1917017	HEX SOCKET SCREW ,M8x35L	2		
C9	1908424	LOCKING NUT, M8	2		

L4D Parts List

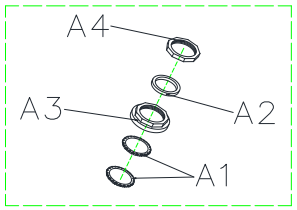

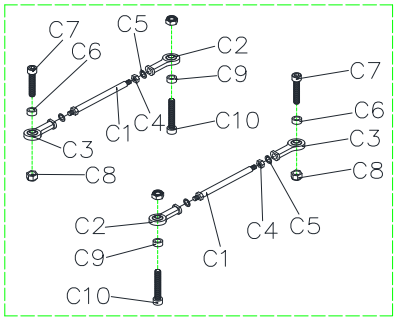

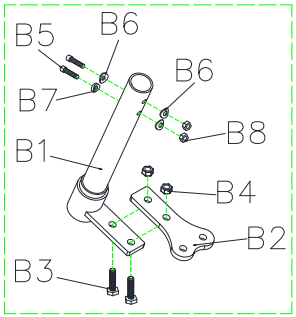

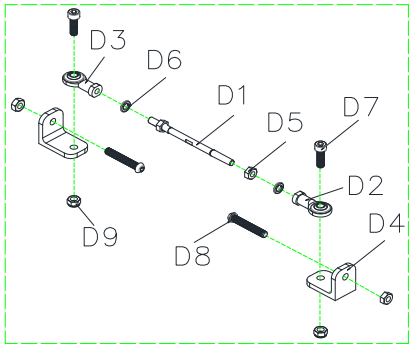

L4D Parts List

Fig&Index NO.	Parts No.	Parts Name / Description	QTY.		Remark
A1-A4		**BEARING ASS'Y**	**1SET**		
A1	1909608	BEARING	2		
A2	1918695	BEARING BUSH	1		
A3	1918696	BEARING LOCKING NUT	1		
A4	1918697	COLLARLESS WASHER	1		
B1-B4		**L-TYPE STEERING AXLE ASS'Y**	**1SET**		
B1	1918099	L TYPE STEERING AXLE	1		
B2	1916130	EXTENSION, L TYPE STEERING AXLE	1		
B3	1905648	HEX SCREW, M8x1.25x20L	2		
B4	1905469	LOCKING NUT , M8x1.25	2		
B5	1915559	HEXAGON BOLT M8xP1.25x40L	2		
B6	1913502	CURED WASHER, M8	3		
B7		CURED WASHER, OD=17, ID=8, T=6mm	1		
B8	1905469	LOCKING NUT , M8x1.25	2		
C1-C10		**GUIDING CONNECTION ROD ASS'Y**	**1SET**		
C1	1917888	GUIDING CONNECTION ROD	1		
C2	1907507	BALL JIONT ,L	1		
C3	1908748	BALL JIONT ,R	1		
C4	1912934	LOCKING NUT , M8x13x1.25	1		
C5	1907794	SPRING WASHER ,OD=14 ,ID=8 ,T=2mm	2		
C6		SPACER ψ8.1xψ11x3T	1		
C7	1917017	HEX SOCKET SCREW , M8xP1.25x35L	1		
C8	1905469	LOCKING NUT , M8x1.25	2		
C9		SPACER, ψ8.1Xψ11X12L	1		
C10		HEX SOCKET SCREW , M8x45L	1		
D1	1921228	GUIDING CONNECTION ROD ,M8x122L	1		
D2	1907507	BALL JIONT ,L	1		
D3	1908748	BALL JIONT ,R	1		
D4	1920949	CONNECTING ROD LOCK PLATE	2		
D5	1912934	LOCKING NUT , M8xP1.25 clock w	1		
D5	1920951	LOCKING NUT , M8xP1.25 counter clockw	1		
D6	1907794	SPRING WASHER ,OD=14 ,ID=8 ,T=2mm	2		
D7	1920950	HEXAGONAL BOLT M8x25L	2		
D8	1908423	HEX SOCKET SCREW , M8x50L	2		
D9	1905469	LOCKING NUT , M8xP1.25	3		

L4D Parts List

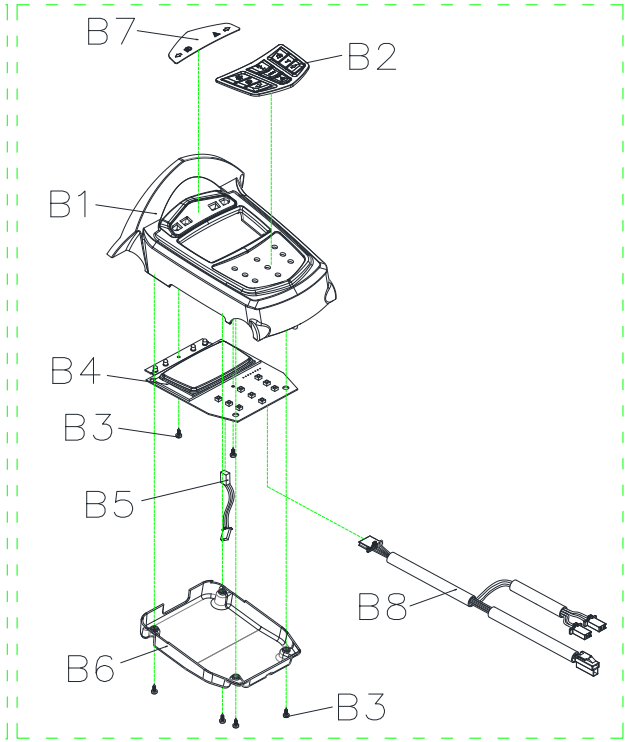

L4D Parts List

Fig&Index NO.	Parts No.	Parts Name / Description	QTY.		Remark
B1-B8	**1914694**	**PANEL COER ASS'Y, LCD**	**1SET**		
B1	1912462	PANEL COER, LCD	1		
B2	1904369	RUBBER KEYPAD, LCD	1		
B3		CROSS SCREW , M3x8L	6		
B4	1908604	PC BOARD	1		
B5	1921270	CABLE, SPEED LEVER COMP.	1		
B6		WATERPROOF COER, PANEL	1		
B7	1915655	LABEL, PANEL COVER	1		
B8	1921271	CABLE, LIGHT	1		

L4D Parts List

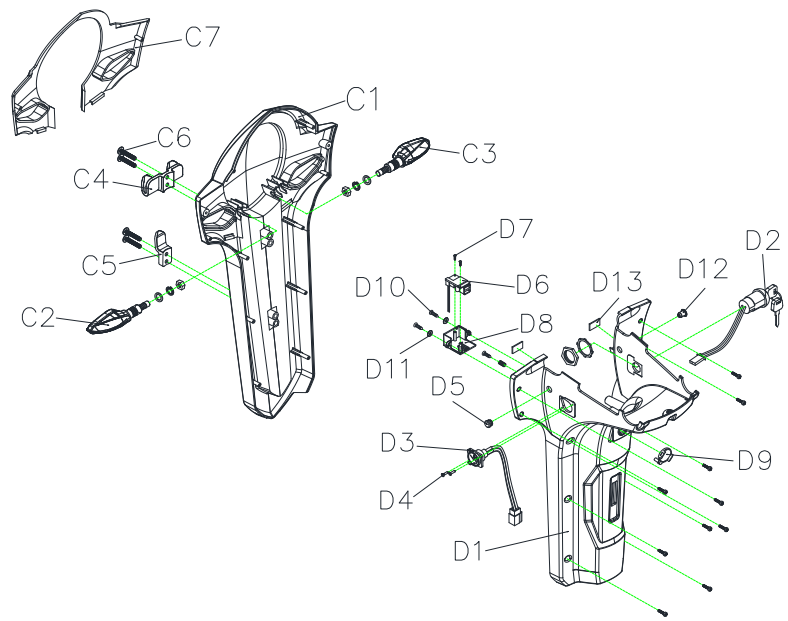

L4D Parts List

Fig&Index NO.	Parts No.	Parts Name Description	QTY.		Remark
C1		FRONT TILLER SHROUD, PANTONE 201C	1		
C1	1914555	FRONT TILLER SHROUD, ORANGE 15	1		
C1	1914553	FRONT TILLER SHROUD, PANTONE RED	1		
C1	1914556	FRONT TILLER SHROUD, GREEN 43	1		
C1	1914557	FRONT TILLER SHROUD, BLUE 54	1		
C1	1913902	FRONT TILLER SHROUD, CHAMPAGNE	1		
C1	1915048	FRONT TILLER SHROUD, GRAY 77	1		
C1	1915772	FRONT TILLER SHROUD, WHITE 91	1		
C2	1913480	TURN SIGNAL, YELLOW, L	1		
C3	1913479	TURN SIGNAL, YELLOW, R	1		
C4		BASKET BRACKET, UPPER	1		
C5		BASKET BRACKET, LOWER	1		
C6		TRUSS SCREW , M6xP1.0x55L	4		
C7	1913901	FRONT TILLER SHROUD DECORATION	1		
D1	1913481	REAR TILLER SHROUD ,BALCK	1		
D2	1904251	ELECTRONIC, KEY SWITCH.	1		
D3-D4		**CHARGER SOCKET ASS'Y**	**1**		
D3	1904249	CHARGER SOCKET	1		
D4		SELF TAPPING SCREW ,M2.5x8L	2		
D5		BRAKE HOLE RUBBER PLUG	1		
D6		USB SOCKET	1		
D7		CROSS SCREW , φ2.5x6L	2		
D8		USB ANTI-DUST COER	1		
D9		CHARGER ANTI-DUST COER	1		
D10		SELF TAPPING SCREW ,M3.5x15	12		
D11		FLAT WASHER ,M3 ,OD=9 ,ID=3 ,T=0.8T	2		
D12		BRAKE HOLE RUBBER PLUG	1		
D13		FOAM GLUE ,BLACK	2		

L4D Parts List

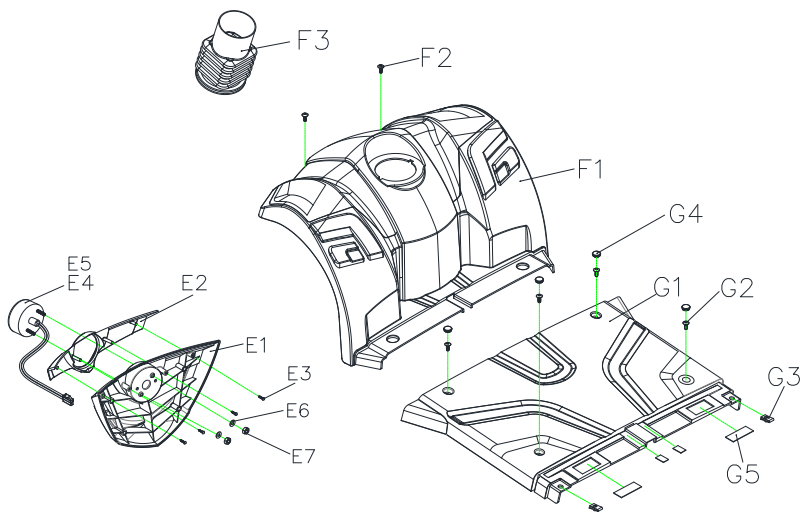

L4D Parts List

Fig&Index NO.	Parts No.	Parts Name Description	QTY.		Remark
E1	1913018	FRONT BUMPER COVER	1		
E2	1915138	FRONT BUMPER COER DECORATION, ORANGE 15	1		
E2	1915558	FRONT BUMPER COER DECORATION, RED	1		
E2		FRONT BUMPER COER DECORATION, GREEN 43	1		
E2	1914957	FRONT BUMPER COER DECORATION, BLUE 54	1		
E2	1912801	FRONT BUMPER COER DECORATION, CHAMPAGNE	1		
E2	1915050	FRONT BUMPER COER DECORATION, GRAY 77	1		
E2		FRONT BUMPER COER DECORATION BLACK	1		
E2	1915769	FRONT BUMPER COER DECORATION, WHITE 91	1		
E3	1905520	SELF TAPPING SCREW ,M4x12	4		
E5	1913482	HEADLIGHT	1		
E6		FLAT WASHER M6 ,OD=13 ,ID=6.5 ,T=1mm	2		
E7	2990533	LOCKING NUT , M6	2		
F1	1912678	FRONT SHROUD	1		
F2	1907539	CROSS SCREW, M6x15L	2		
F3	1914650	RUBBER GASKET	1		
G1	1913483	SHROUD, FOOTREST	1		
G2	1907539	CROSS SCREW, M6x15L	4		
G3	1904236	SPRING NUT , M6	2		
G4	1915654	FOOTREST SHROUD PLUG	4		
G5		DUAL LOCK	2		

L4D Parts List

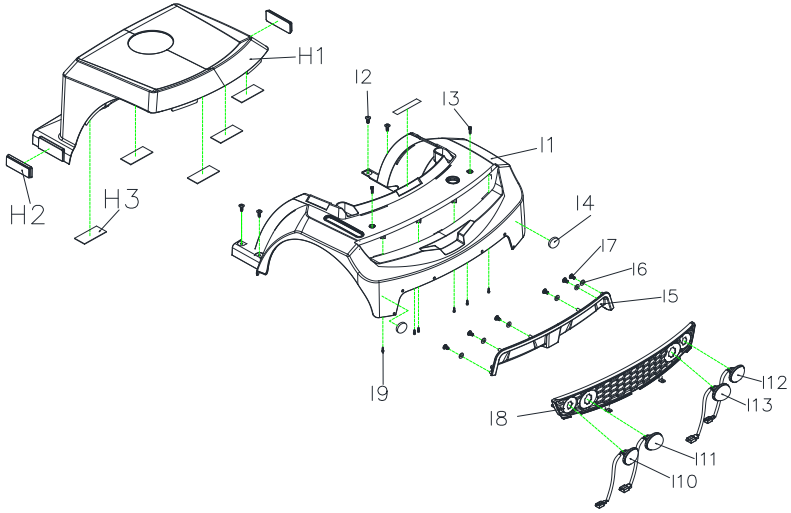

L4D Parts List

Fig&Index NO.	Parts No.	Parts Name Description	QTY.		Remark
H1	1913513	BATTERY COVER	1		
H2	1913514	SIDE REFLECTOR, YELLOW	2		
H3		DUAL LOCK	5		
I1	1914567	REAR SHROUD, ORANGE 15	1		
I1-I4			**1**		
I1	1914566	REAR SHROUD, RED18	1		
I1	1914568	REAR SHROUD, GREEN 43	1		
I1	1914569	REAR SHROUD, BLUE 54	1		
			1		
I1	1912892	REAR SHROUD, CHAMPAGNE	1		
I1	1915049	REAR SHROUD, GRAY 77	1		
I1		REAR SHROUD, WHITE 91	1		
I2	1907539	CROSS SCREW, M6x15L	4		
I3	1915450	CROSS SREW , M6×20L	2		
I4	1913050	REFLECTORS, RED	2		
I5	1913052	REAR COER	1		
I6		FLAT WASHER M4 ,OD=10 ,ID=4 ,T=1mm	6		
I7		TRUSS SCREW ,M3.5X12L	6		
I8	1913067	REAR SHROUD, DECORATION	1		
I9	1905520	SELF TAPPING SCREW ,M4x12L	6		
I10	1912551	TURN SIGNAL, YELLOW, L	1		
I11	1912556	POSITION LIGHT, RED, L	1		
I12	1912552	TURN SIGNAL, YELLOW, R	1		
I13	1912555	POSITION LIGHT, RED, R	1		

L4D Parts List

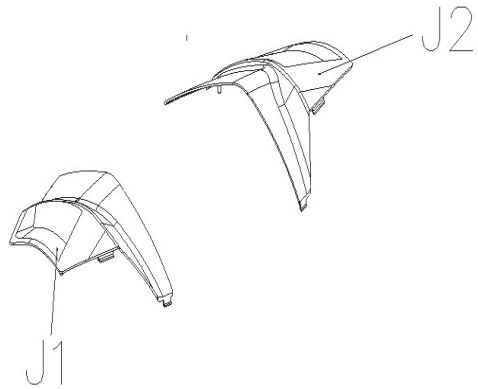

L4D Parts List

Fig&Index NO.	Parts No.	Parts Name / Description	QTY.		Remark
			1SET		
J1	1914563	FRONT SHROUD DECORATION, L, ORANGE 15	1		
J2	1914559	FRONT SHROUD DECORATION, R, ORANGE 15	1		
			1		
			1SET		
			1SET		
J1	1912799	FRONT SHROUD DECORATION, L, CHAMPAGNE	1		
J2	C08-077-00318	FRONT SHROUD DECORATION, R, CHAMPAGNE	1		
			1SET		
J1	1914562	FRONT SHROUD DECORATION, L, RED18	1		
J2	1914558	FRONT SHROUD DECORATION, R, RED18	1		
			1SET		
J1	1914565	FRONT SHROUD DECORATION, L, BLUE 54	1		
J2	1914561	FRONT SHROUD DECORATION, R, BLUE 54	1		
J1	1915051	FRONT SHROUD DECORATION, L, GRAY 77	1		
J2	1915052	FRONT SHROUD DECORATION, R, GRAY 77	1		
J1	1915770	FRONT SHROUD DECORATION, L, WHITE 91	1		
J2	1915771	FRONT SHROUD DECORATION, R, WHITE 91	1		
			1		
J1	1914564	FRONT SHROUD DECORATION, L, GREEN	1		
J2	1914560	FRONT SHROUD DECORATION, R, GREEN	1		

L4D Parts List

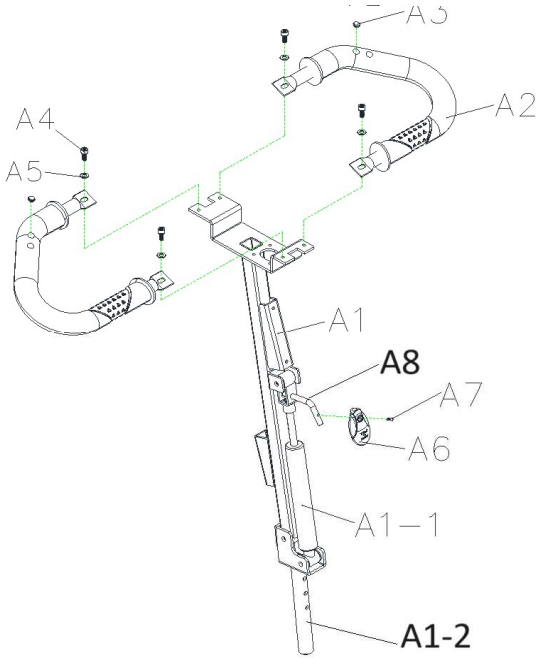

L4D Parts List

Fig&Index NO.	Parts No.	Parts Name Description	QTY.		Remark
A1	1915816	T-TYPE TILLER	1		
A1-1	1904289	OIL PRESSURE STICK	1		
A1-2	1912638	T-TiLLER LOWER	1		
A2	1915815	RING TYPE TILLER	2		
A3	C25-062-00101	RING HANDLE BAR PLUG	2		
A4	9022060151001	HEX SOCKET SCREW , M6x15L	4		
A5	9214060100132	FLAT WASHER ,OD=13 ,ID=6.5 ,T=1mm	4		
			1SET		
A6	C26-036-00100	HYDRAULIC PUMP HANDLE	1		
A7	9004040080704	CROSS SREW , M4x8	1		
A8	1913965	LEVER			

L4D Parts List

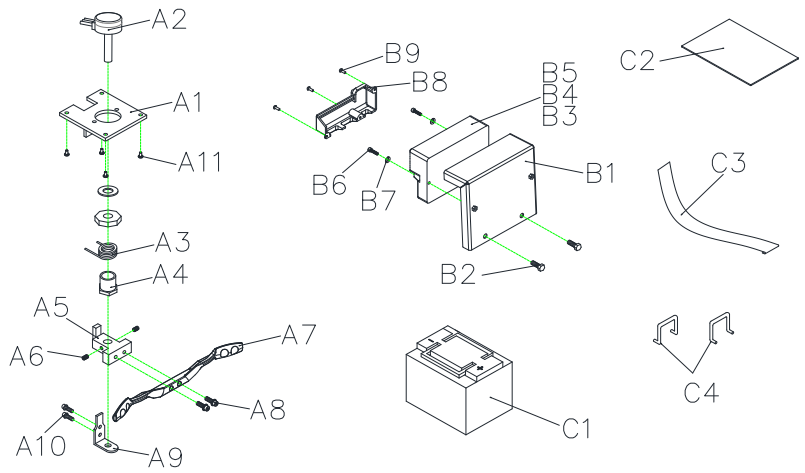

L4D Parts List

Fig&Index NO.	Parts No.	Parts Name / Description	QTY.		Remark
A1-A11	**1904224**	**R ASS'Y**	**1SET**		
A1		ACCELERATOR FIXED PLATE	1		
A2	1905662	ACCELERATOR ,RQ30L	1		
A3	1901881	ACCELERATOR TORSION SPRING	1		
A4		ACCELERATOR HEXAGON NUT	1		
A5		ACCELERATOR LEER HOLDER	1		
A6	1906485	LOCKING SCREW, 4x4	2		
A7	1913512	SPEED LEER	1		
A8		CROSS SCREW , M4x12	2		
A9		ACCELERATOR POSITIONING PLATE	1		
A10		CROSS SCREW , M3x4L	2		
A11		CROSS SCREW , M3x8L	4		
B1		CONTROLLER HOLDER	1		
B2		HEX SCREW , M8xP1.25x20L	2		
B5	1907982	CONTROLLER, DYNAMIC 160A(RHINO 2)	1		
B6	1912893	HEXAGONAL BOLT M5x25L	2		
B7		SPRING WASHER M5	2		
B8	1921298	CONTROLLER COER	1		
B9	1915544	CROSS SCREW , M3x8L	3		
C2	1912420	BATTERY RUBBER PAD ,L210xW170xT3mm	2		
C3	1917876	BATTERY ELCRO STRIP	2		
C4		BATTERY HARNESS BUCKLE	2		

L4D Parts List

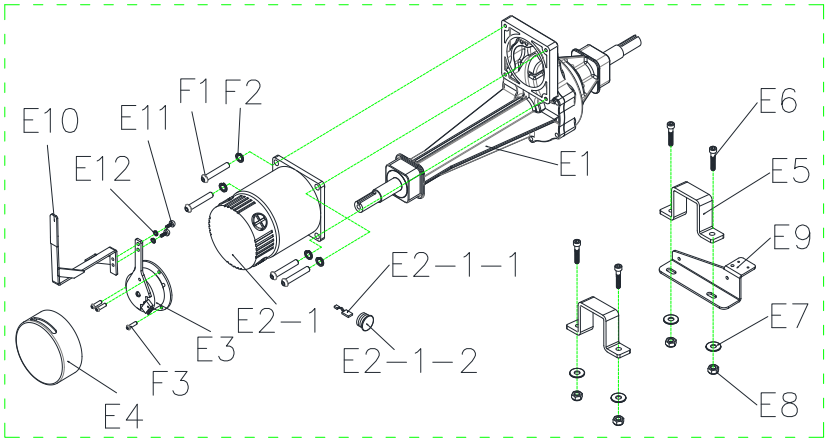

L4D Parts List

Fig&Index NO.	Parts No.	Parts Name Description	QTY.		Remark
E1-E4	1913484	REAR DRIE ASS'Y, 580mm/19:1/1000W/5500RPM	1		
E1	1913779	TRANSAXLE, 19:1/580mm	1		
E2	1914170	MOTOR ASS'Y 1000W/5500RPM(W/I 100kgf-cm ELECTRO-MAGNETIC BRAKE)	1		
E2-1	1913726	MOTOR ONLY, 1000W/5500RPM	1		
E2-1-1	1913327	CARBON BRUSH, 7x11	4		
E2-1-2	1915991	CARBON BRUSH CAP ,7x11mm	4		
E3	1912765	ELECTRO-MAGNETIC BRAKE, 100kgf-cm	1		
E4		COER, ELECTRO-MAGNETIC BRAKE	1		
E5	1913726	TRANSAXLE MOUNTING	2		
E6		HEXAGONAL BOLT M8xP1.25x45L	4		
E7	1916886	FLAT WASHER ,OD=22 ,ID=8 ,T=1.5mm	8		
E8	1905469	LOCKING NUT , M8	4		
E9		HOLDER, SENSOR SWITCH	1		
E10	1914251	FREE WHEEL LEER	1		
E11	1907527	CROSS SCREW , M5x15	2		
E12		SPRING WASHER ,OD=8 ,ID=5 ,T=1mm	2		
F1	1921564	HEX SOCKET SCREW , M8x20L	4		
F2		SPRING WASHER ,OD=14 ,ID=8 ,T=2mm	4		
F3	1912003	CROSS SCREW , M4x12L	3		

L4D Parts List

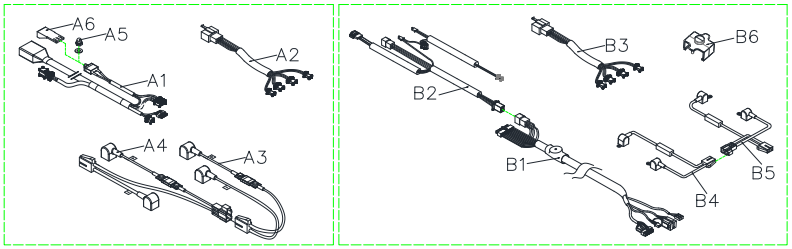

L4D Parts List

Fig&Index NO.	Parts No.	Parts Name / Description	QTY.		Remark
A6		CIRCUIT BREAKERS MOUNTING	1		
B1	1921299	WIRE HARNES ASS	1		
B2	1921300	MAIN CABLE ,UPPER	1		
B3	1921301	CABLE, REAR LIGHT	1		
B4	1921302	BATTERY CABLE ,MALE	1		
B5	1908274	BATTERY CABLE ,FEMALE	1		
B6	1921303	POWER CABLE CLIP	2		
ND	1914435	CABLE SET MERC 4	1		
	1908761	SPEED SENSOR (NOT DEPICTED)	1		

L4D Parts List

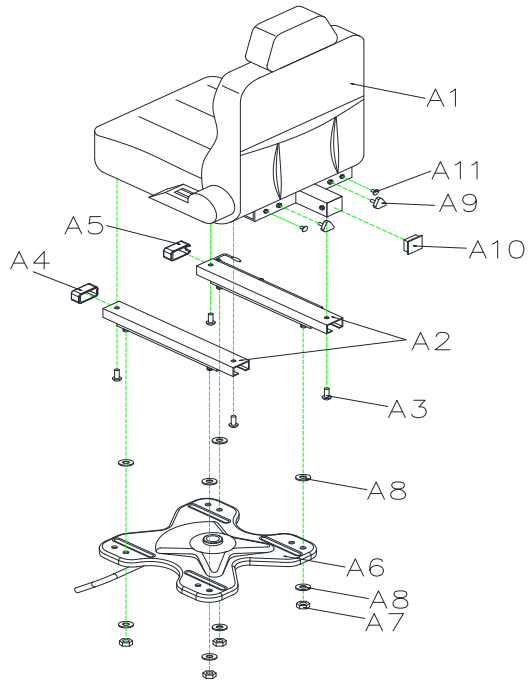

L4D Parts List

Fig&Index NO.	Parts No.	Parts Name / Description	QTY.		Remark
8		**SEAT ASSY**			
A1-A11	**1912698**	**18"x18"x22" SEAT ASS'Y, TA386C3**	**1SET**		
A1		18"×18"×22" SEAT, MODEL:TA386C3	1		
A2	1907265	SLIDING, 150mm	1		
A3		HEX SOCKET SCREW ,M8xP1.25x16L	4		
A4	1907269	SEAT SLIDER PROTECTION PLUG -L	1		
A5	1907270	SEAT SLIDER PROTECTION PLUG -R	1		
A6	1917290	SEAT PLATE ASS'Y ,ML4SB	1		
A7	1905469	LOCKING NUT , M8x1.25	4		
A8	1916886	FLAT WASHER , OD=22,ID=8.5,T=1.5mm	8		
A9	1905612	TRIANGLE SCREW ,M8x25L	2		
A10	1916544	PLASTIC SQUARE CAP ,30x30mm	1		
A11		SEAT SCREW PROTECTION PLUG	2		

L4D Parts List

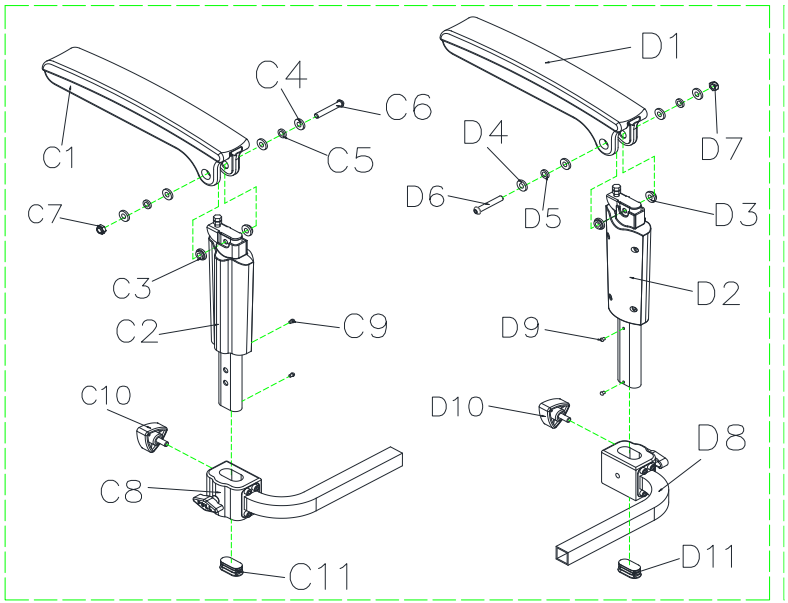

L4D Parts List

Fig&Index NO.	Parts No.	Parts Name / Description	QTY.		Remark
C1-C11	**1904605**	**ARMREST, ADJUSTABLE, L**	**1SET**		
C1		ARMREST, UPPER	1		
C2	1904969	ARMREST, LOWER	1		
C3	C07-044-01701	GASKET ,8mm	2		
C4	1908424	FLAT WASHER ,M8 ,OD=16 ,ID=8 ,T=1mm	4		
C5		SPACER TUBE ,OD=11 ,ID=8.1 ,T=3mm	2		
C6	1908423	HEX SOCKET SCREW ,M8x50L	1		
C7	1908424	LOCKING NUT, M8xP1.25	1		
C8	1905936	ARMREST ADJUSTMENT BASE	1		
C9		CROSS SCREW ,M4x12L	2		
C10	1905612	TRIANGLE SCREW ,M8x25L	1		
C11		PLUG, 40x20mm	1		
D1-D11	**1904606**	**ARMREST, ADJUSTABLE, R**	**1SET**		
D1	C07-044-00508	ARMREST, UPPER	1		
D2	1904970	ARMREST, LOWER	1		
D3	C07-044-01701	GASKET ,8mm	2		
D4	9214080100163	FLAT WASHER ,M8 ,OD=16 ,ID=8 ,T=1mm	4		
D5	C05-017-00600	SPACER TUBE ,OD=11 ,ID=8.1 ,T=3mm	2		
D6	1908423	HEX SOCKET SCREW ,M8x50L	1		
D7	1908424	LOCKING NUT, M8xP1.25	1		
D8	1905936	ARMREST ADJUSTMENT BASE	1		
D9		CROSS SCREW , M4x12L	2		
D10	1905612	TRIANGLE SCREW ,M8x25L	1		
D11		PLUG, 40x20mm	1		

L4D Parts List

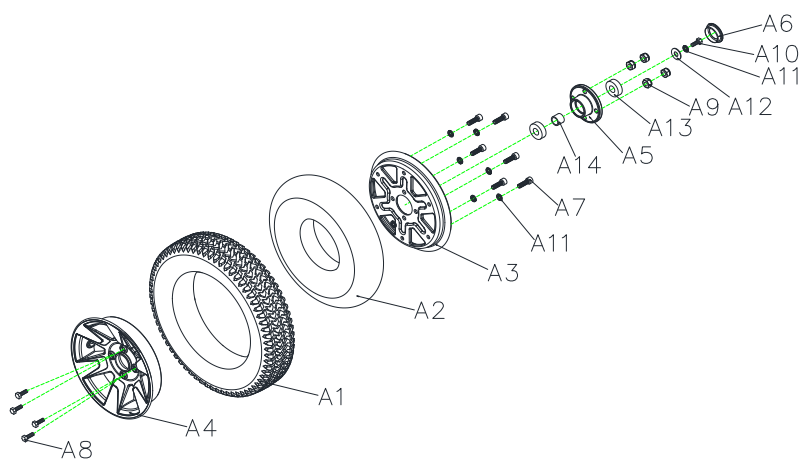

L4D Parts List

Fig&Index NO.	Parts No.	Parts Name / Description	QTY.		Remark
A1-A14	**1908294**	**FRONT WHEEL ASS'Y, BLACK, W/O LOGO WHEEL COER**	**1SET**		
A1	1904287	TIRE, 3.0-8C248, BLACK	1		
A2	1904286	INNER TUBE 3.0-8	1		
A3	1908462	WHEEL RIM, ALUNINUM, 8"	1		
A4	1908461	WHEEL RIM, IRON, 8"	1		
A5	1905467	AXLE COLLAR, FRONT WHEEL	1		
A6		WHEEL COER, W/O LOGO	1		
A7	1909778	HEX SOCKET SCREW ,M8x30L	6		
A8		HEX SCREW, M8x1.25x30L	4		
A9	1905469	LOCKING NUT , M8x1.25	4		
A10	1916884	HEXAGONAL BOLT M8x1.25x20L	1		
A11	1907794	SPRING WASHER, OD=14 ,ID=8 ,T=2mm	7		
A12		FLAT WASHER ,OD=22 ,ID=8 ,T=3mm	1		
A13		BEARING, 6202ZZ	2		
A14	1912828	FRONT TIRE SPACER TUBE	1		

L4D Parts List

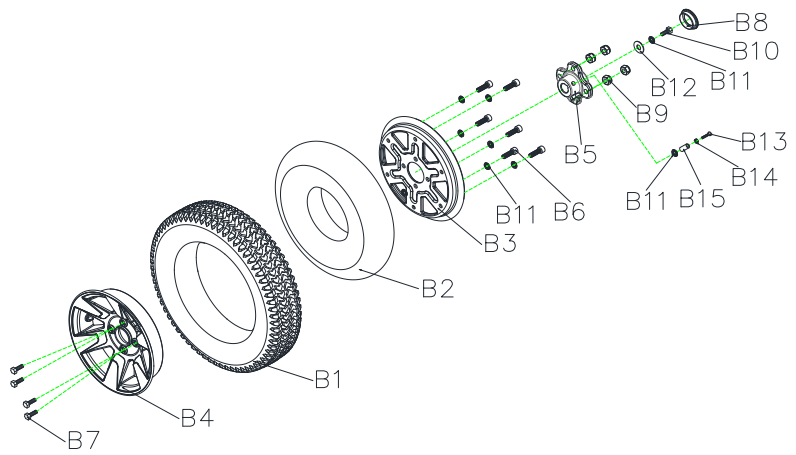

L4D Parts List

Fig&Index NO.	Parts No.	Parts Name Description	QTY.		Remark
B1-B15	**1908295**	**REAR WHEEL ASS'Y, BLACK, R, W/I LOGO WHEEL COER**	**1SET**		
B1	1904287	TIRE, BLACK, 3.0-8C248-16	1		
B2	1904286	INNER TUBE, 3.0-8	1		
B3	1908462	WHEEL RIM , ALUNINUM , 8"	1		
B4	1908461	WHEEL RIM , IRON , 8"	1		
B5	1905203	AXLE COLLAR,REAR WHEEL	1		
B6	1909778	HEX SOCKET SCREW ,M8x30L	6		
B7		HEX SCREW, M8x1.25x30L	4		
B8		WHEEL COER, W/O LOGO	4		
B9	1905469	LOCKING NUT , M8x1.25	4		
B10	1916884	HEX SCREW, M8x1.25x20L	1		
B11	1907794	SPRING WASHER, OD=14 ,ID=8 ,T=2mm	8		
B12		FLAT WASHER ,OD=22 ,ID=8 ,T=3mm	1		
B13	1005950	HEX SCREW, M8x1.25x65L	1		
B14	1905469	LOCKING NUT , M8	1		
B15	1912828	SPACER TUBE	1		
	1912044	SPEED SENSOR MAGNET (NOT DEPICTED)			

L4D Parts List

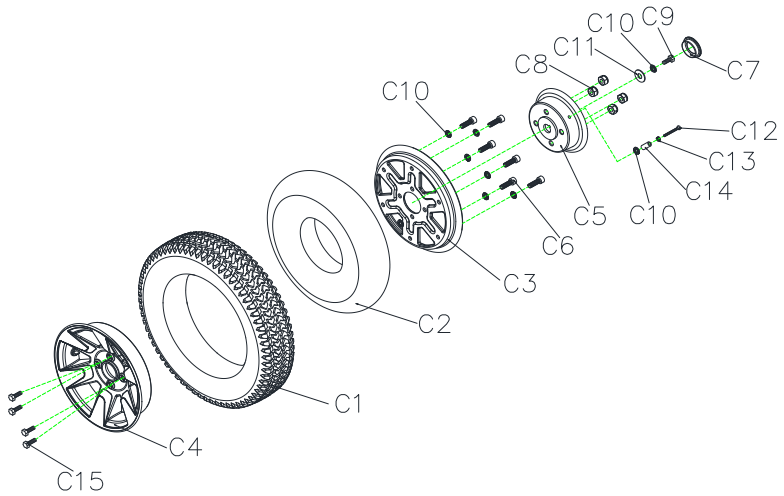

L4D Parts List

Fig&Index NO.	Parts No.	Parts Name Description	QTY.		Remark
C1-C15	**1908296**	**REAR WHEEL ASS'Y, BLACK, L, W/I LOGO WHEEL COER**	**1SET**		
C1	1904287	TIRE, BLACK, 3.0-8C248-16	1		
C2	1904286	INNER TUBE, 3.0-8	1		
C3	1908462	WHEEL RIM, ALUNINUM, 8"	1		
C4	1908461	WHEEL RIM, IRON, 8"	1		
C5	1906570	DRUM BRAKE	1		
C6	9021080301253	HEX SOCKET SCREW ,M8x30L	6		
C7	C26-060-00801	WHEEL COER, W/O LOGO	1		
C8	1905469	LOCKING NUT , M8x1.25	4		
C9	1916884	HEX SCREW, M8x20L	1		
C10	1907794	SPRING WASHER, OD=14 ,ID=8 ,T=2mm	8		
C11		FLAT WASHER ,OD=22 ,ID=8 ,T=3mm	1		
C12		HEX SCREW, M8x1.25x65L	1		
C13	1905469	LOCKING NUT , M8	1		
C14	1912828	SPACER TUBE	1		
C15		HEX SCREW, M8x1.25x30L	4		

L4D Parts List

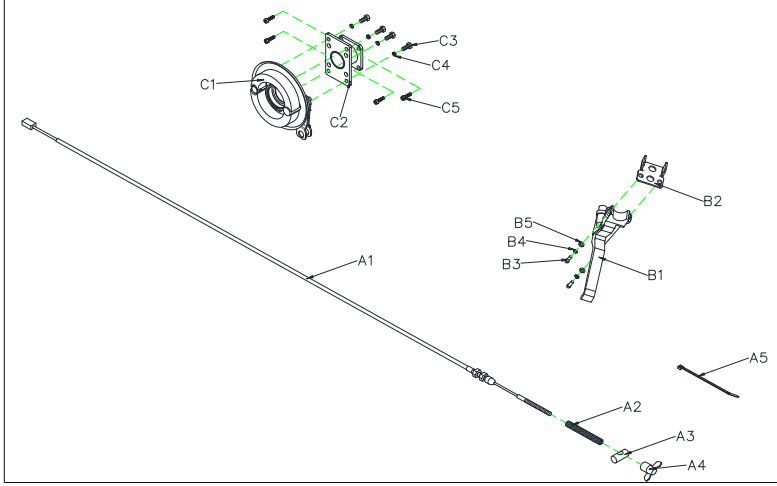

L4D Parts List

Fig&Index NO.	Parts No.	Parts Name / Description	QTY.		Remark
10		**BRAKE ASS'Y**			
A1-C5	**S35-077-00200**	**BRAKE ASS'Y ,L**	**1SET**		
A1-A4	**S35-077-00300**	**BRAKE ASS'Y**	**1SET**		
A1	1921306	BRAKE CABLE ,(2000mm)	1		
A2		SPRING, STEEL INNER WIRE	1		
A3		BRAKE STOPPER	1		
A4		BRAKE NUT	1		
B1	1906303	BRAKE LEER ,306ALK ,BLACK ,L	1		
B2		BRAKE LEER FIXED PLATE	1		
B3		CROSS SCREW , M5x20L	2		
B4		SPRING WASHER ,OD=8 ,ID=5 ,T=1mm	2		
B5		FLAT WASHER ,OD=10 ,ID=5.5 ,T=1mm	2		
C1		REAR BRAKE COER	1		
C2		HOLDER, BRAKE COER	1		
C3		HEX SCREW, M6xP1.0x10L	4		
C4		SPRING WASHER, OD=10 ,ID=6 ,T=1.5mm	4		
C5	9021050150801	HEXAGONAL BOLT M5x15L	4		

L4D Parts List

Fig&Index NO.	Parts No.	Parts Name / Description	QTY.		Remark
11		**ACCESSORIES**			
A1-A2		REAR MIRROR SET	1SET		
A1	1904228	REAR MIRROR , R	1		
A2	1904227	REAR MIRROR , L	1		
E1	1908761	SENSOR SWITCH	1		
G1	1913856	PLASTIC BASKET ,W/ HANDLE	1		
H1	C26-001-00701	FISH ON SEAT PLATE COER	1		
H2	C26-016-00501	SEAT ROTATION LEER COER	1		
H3	C34-022-00100	NYLON CABLE TIE	2		
H4	C36-005-00101	ALUMINUM NAMEPLATE	1		
H5	C36-001-00100	RIET	2		
I4	C37-077-00602	OWNER'S MANUAL ,	1		
J4	C99-077-00304	CARTON ,	1		

L4D Parts List

Fig&Index NO.	Parts No.	Parts Name / Description	QTY.		Remark
A1	C27-051-01000	SPEED LEER LABEL	1		
A3	C27-009-01700	EMI LABEL	1		
A4	C27-062-02801	USB LABEL	1		
A6	C27-060-02200	CLUTCH LABEL-English	1		
A19	C27-034-01900	LOGO LABEL ,	1		
A24	C27-001-00200	CE LABEL ,30x23mm	1		
A28	C26-051-01000	POWER CABLE CLIP	2		
A29	C27-051-01900	POWER CABLE CLIP LABEL	2		
A30	C27-062-00100	BATTERY WIRE LABEL	1		
A35	C27-062-00200	TILLER WARING LABEL	1		
A38	C27-077-00601	TILLER SHROUD LABEL ,	1		
A48	C27-301-02400	SERIAL NUMBER LABEL	1		
A49	C27-301-02500	DRIE CARTON BARCODE LABEL	1		